# CrystaLatch™ 1x8 Series Fiber Optic Switch

## (SM, PM, Unidirectional, Bidirectional, High Power)

(Protected by U.S. patents 7224860，6757101，6577430 and pending patents)

DATASHEET

BUY NOW

The CrystaLatch™ 1x8 Series fiber optical switch connects optical channels by redirecting an incoming optical signal into a selected output fiber. This is achieved using patented non-mechanical configurations and activated via an electrical control signal. The latching operation preserves the selected optical path after removing the drive signal. The all solid state CL 1x8 fiber optic switch features low insertion loss, high extinction ratio, high channel isolation, and extremely high reliability and repeatability. It is designed to meet the most demanding switching requirements of continuous operation without failure, longevity, operation under shock/vibration environment and large temperature variations, and fast response time.

The switch also has build-in Circulator and isolator functions. An electronic driver is available for this series of switches.

The magneto-optical crystals used in the CL switches have no fatigue nor drift effect.

## Features

- High Speed
- Non-Mechanical
- High Reliability
- Fail-Safe Latching
- Low Insertion Loss
- Rugged
- Compact
- Cost Effective
- Direct Low Voltage Drive

## Applications

- Optical Signal Routing
- Network Protection
- Burst Switching
- Configurable Add/Drop
- Signal Monitoring
- Instrumentation

## Specifications

| Parameter | | Min | Typical | Max | Unit |
|---|---|---|---|---|---|
| Operation Wavelength [1] | | 1520 | 1550 | 1580 | nm |
| | | 1295 | 1310 | 1325 | nm |
| Insertion Loss [2] | | | 1.2 | 2.2 | dB |
| Cross Talk [2] | Bidirectional Series | 35 | 45 | | dB |
| | Unidirectional Series | 40 | 50 | | dB |
| Return Loss [2] | | 50 | 55 | | dB |
| PDL (Except PM Series Switch) | | | 0.15 | 0.35 | dB |
| Extinction Ratio (PM Series Switch only) | | 18 | 25 | | dB |
| Polarization Mode Dispersion (SMF Series only) | | | | 0.2 | ps |
| Optical Switching Speed (Rise, Fall) | | 5 | | 10 | µs |
| Repetition Rate | | | 2K | | Hz |
| Durability | | $10^{15}$ | | | cycle |
| Optical Power Handling | Standard | | 300 | 500 | W |
| | High Power Series | | | 2 [3] | mW |
| Operating Temperature [4] | | -5 | | 70 [4] | °C |
| Storage Temperature | | -40 | | 85 | °C |
| Fiber Type | | SMF-28, Panda PM, or equivalent | | | |
| Weight | | 59 | | | g |

**Notes**:

[1]. Agiltron can achieve same SPEC at L band

[2]. Measured without connectors

[3]. Continuous operation, for pulse operation call

[4]. The premium versions with the operating temperature larger than -5 ~ +70°C are available, please see the ordering information

**Legal notices:** All product information is believed to be accurate and is subject to change without notice. Information contained herein shall legally bind Agiltron only if it is specifically incorporated into the terms and conditions of a sales agreement. Some specific combinations of options may not be available. The user assumes all risks and liability whatsoever in connection with the use of a product or its application.

Rev 03/14/24



Information contained herein is deemed to be reliable and accurate as of the issue date. Photonwares reserves the right to change the design or specifications at any time without notice. Agiltron is a registered trademark of Photonwares Corporation in the U.S. and other countries.

# CrystaLatch™ 1x8 Series Fiber Optic Switch

## (SM, PM, Unidirectional, Bidirectional, High Power)

(Protected by U.S. patents 7224860，6757101，6577430 and pending patents)

DATASHEET

## Mechanical Dimensions (Unit: mm)

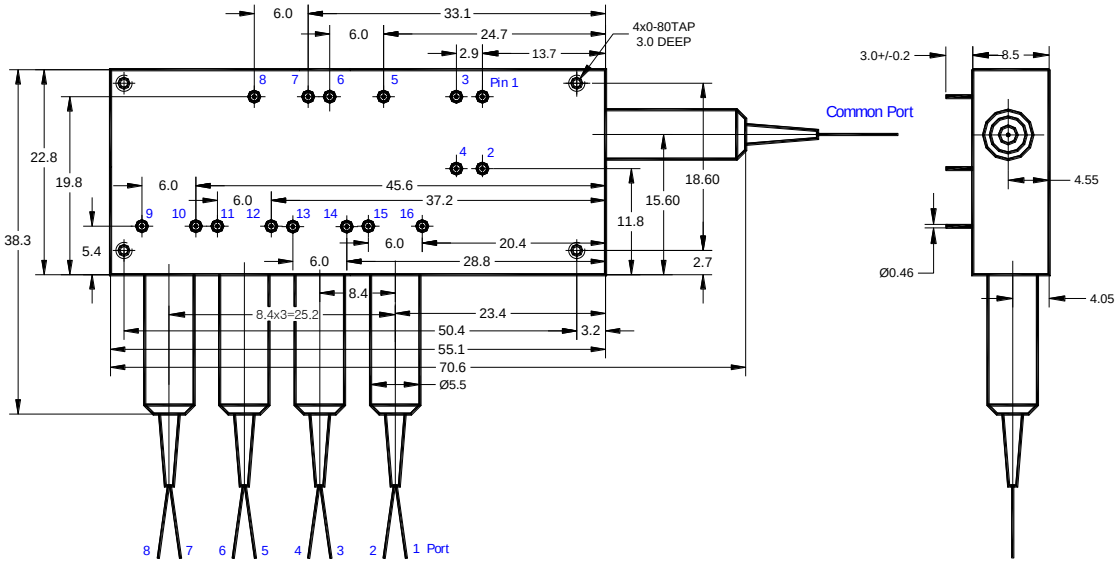


*Product dimensions may change without notice. This is sometimes required for non-standard specifications.

## Electrical Driving Information

Each switching point is actuated by applying a polarity voltage pulse through a pair of PINS, and latched after pulse removed.

| Parameter | Minimum | Typical | Maximum | Unit |
|---|---|---|---|---|
| Resistance (each Pin group) | 15 | 18 | 22 | Ω |
| Switch Voltage | 2.25 | 2.5 | 2.75 [1] | V |
| Pulse Duration | 0.2 | 0.3 | 0.5 | ms |

[1]. Over this value will damage the device

Driving kit with USB and/or RS232 or TTL interfaces is available. We provide GUI for USB and RS232 interface. Please contact sales for more information.

### Bidirectional series CL 1x8, or 8x1 Switch Electrical Driving Table

| Optical Path | Pin Group 1 | | Pin Group 2 | | Pin Group 3 | | Pin Group 4 | | Pin Group 5 | | Pin Group 6 | | Pin Group 7 | | Pin Group 8 | |
|---|---|---|---|---|---|---|---|---|---|---|---|---|---|---|---|---|
| | Pin 1 | 2 | 3 | 4 | 5 | 6 | 7 | 8 | 9 | 10 | 11 | 12 | 13 | 14 | 15 | 16 |
| Common ↔ Port 1 | + [1] | 0 | + | 0 | 0 | + | 0 | + | + | 0 | + | 0 | 0 | + | + | 0 |
| Common ↔ Port 2 | 0 | + | 0 | + | 0 | + | 0 | + | + | 0 | + | 0 | 0 | + | + | 0 |
| Common ↔ Port 3 | + | 0 | 0 | + | 0 | + | 0 | + | + | 0 | + | 0 | + | 0 | 0 | + |
| Common ↔ Port 4 | 0 | + | + | 0 | 0 | + | 0 | + | + | 0 | + | 0 | + | 0 | 0 | + |
| Common ↔ Port 5 | + | 0 | 0 | + | + | 0 | + | 0 | + | 0 | 0 | + | 0 | + | 0 | + |
| Common ↔ Port 6 | 0 | + | + | 0 | + | 0 | + | 0 | + | 0 | 0 | + | 0 | + | 0 | + |
| Common ↔ Port 7 | + | 0 | 0 | + | + | 0 | 0 | + | 0 | + | + | 0 | 0 | + | 0 | + |
| Common ↔ Port 8 | 0 | + | + | 0 | + | 0 | 0 | + | 0 | + | + | 0 | 0 | + | 0 | + |

[1]. "+": 2.25~2.75V Pulse, Topical is 2.5V pulse



Information contained herein is deemed to be reliable and accurate as of the issue date. Photonwares reserves the right to change the design or specifications at any time without notice.
Agiltron is a registered trademark of Photonwares Corporation in the U.S. and other countries.

## Electrical Driving Information (continue)

### Unidirectional series CL 1x8, Switch Electrical Driving Table

| Optical Path | Pin Group 1 | | Pin Group 2 | | Pin Group 3 | | Pin Group 4 | | Pin Group 5 | | Pin Group 6 | | Pin Group 7 | | Pin Group 8 | |
|---|---|---|---|---|---|---|---|---|---|---|---|---|---|---|---|---|
| | Pin 1 | 2 | 3 | 4 | 5 | 6 | 7 | 8 | 9 | 10 | 11 | 12 | 13 | 14 | 15 | 16 |
| Common → Port 1 | + [1] | 0 | + | 0 | 0 | + | 0 | + | + | 0 | + | 0 | 0 | + | + | 0 |
| Common → Port 2 | 0 | + | 0 | + | 0 | + | 0 | + | + | 0 | + | 0 | 0 | + | + | 0 |
| Common → Port 3 | + | 0 | 0 | + | 0 | + | 0 | + | + | 0 | + | 0 | + | 0 | 0 | + |
| Common → Port 4 | 0 | + | + | 0 | 0 | + | 0 | + | + | 0 | + | 0 | + | 0 | 0 | + |
| Common → Port 5 | + | 0 | 0 | + | + | 0 | + | 0 | + | 0 | 0 | + | 0 | + | 0 | + |
| Common → Port 6 | 0 | + | + | 0 | + | 0 | + | 0 | + | 0 | 0 | + | 0 | + | 0 | + |
| Common → Port 7 | + | 0 | 0 | + | + | 0 | 0 | + | 0 | + | + | 0 | 0 | + | 0 | + |
| Common → Port 8 | 0 | + | + | 0 | + | 0 | 0 | + | 0 | + | + | 0 | 0 | + | 0 | + |

[1]. "+": 2.25~2.75V Pulse, Topical is 2.5V pulse

### Unidirectional series CL 8x1 Switch Electrical Driving Table

| Optical Path | Pin Group 1 | | Pin Group 2 | | Pin Group 3 | | Pin Group 4 | | Pin Group 5 | | Pin Group 6 | | Pin Group 7 | | Pin Group 8 | |
|---|---|---|---|---|---|---|---|---|---|---|---|---|---|---|---|---|
| | Pin 1 | 2 | 3 | 4 | 5 | 6 | 7 | 8 | 9 | 10 | 11 | 12 | 13 | 14 | 15 | 16 |
| Common → Port 1 | 0 | + [1] | 0 | + | + | 0 | + | 0 | 0 | + | + | 0 | + | 0 | 0 | + |
| Common → Port 2 | + | 0 | + | 0 | + | 0 | + | 0 | 0 | + | + | 0 | + | 0 | 0 | + |
| Common → Port 3 | 0 | + | + | 0 | + | 0 | + | 0 | 0 | + | + | 0 | 0 | + | 0 | + |
| Common → Port 4 | + | 0 | 0 | + | + | 0 | + | 0 | 0 | + | + | 0 | 0 | + | 0 | + |
| Common → Port 5 | 0 | + | + | 0 | 0 | + | 0 | + | + | 0 | + | 0 | 0 | + | 0 | + |
| Common → Port 6 | + | 0 | 0 | + | 0 | + | 0 | + | + | 0 | + | 0 | 0 | + | 0 | + |
| Common → Port 7 | 0 | + | + | 0 | 0 | + | + | 0 | + | 0 | + | 0 | 0 | + | 0 | + |
| Common → Port 8 | + | 0 | 0 | + | 0 | + | + | 0 | + | 0 | + | 0 | 0 | + | 0 | + |

[1]. "+": 2.25~2.75V Pulse, Topical is 2.5V pulse

**Note**:

The driving voltage value is transient voltage with a full load. The driver circuitry needs to provide sufficient current (~300mA) during the switching. Inside the switch core is an electromagnet with a residual magnetic field. The residual magnetic field will be established when an electrical current flows in one direction through the coil for a sufficiently long period. The residual magnetic field latches the switch state even without applying a voltage (the current flow stopped). Flowing a current in the opposite direction for a sufficient time changes the switch stage by establishing a reversal magnetic field. The coil is forgiving to the driver unless one burns it by applying a higher voltage or a current for too long (day). The switch can also be operated at high repetition rates of kHz, where the residual magnetic field may not be fully established.




Information contained herein is deemed to be reliable and accurate as of the issue date. Photonwares reserves the right to change the design or specifications at any time without notice.
Agiltron is a registered trademark of Photonwares Corporation in the U.S. and other countries.

## Typical Switching Response

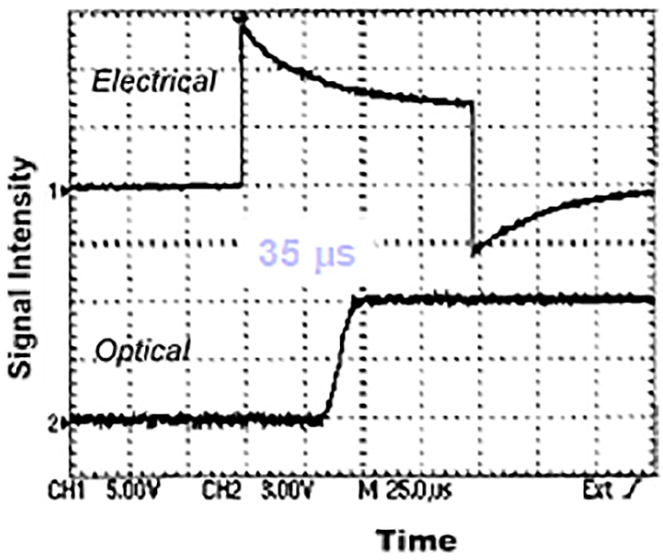


## Typical Loss Change of 1x2 vs Switching Numbers

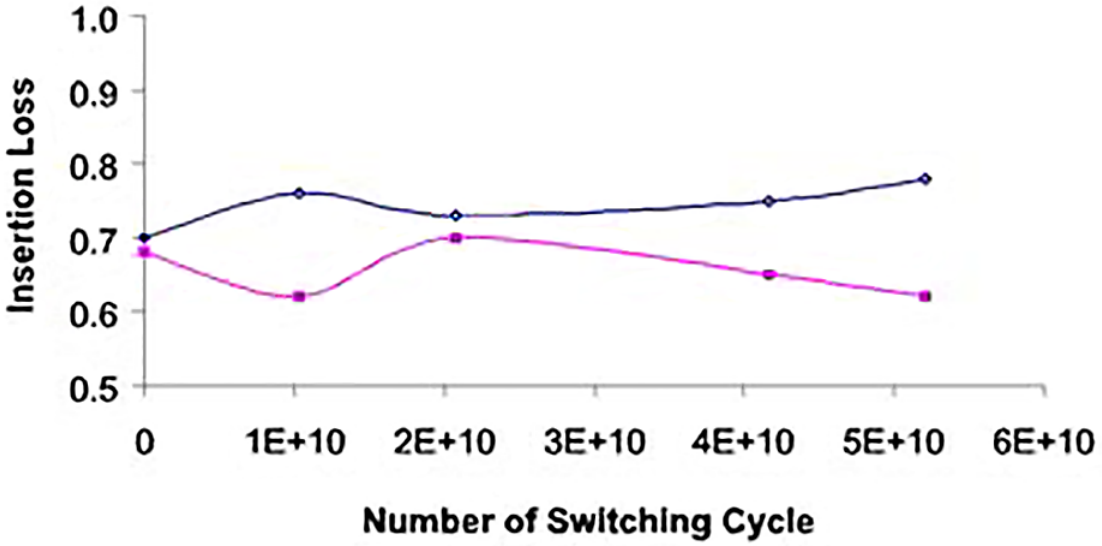





Information contained herein is deemed to be reliable and accurate as of the issue date. Photonwares reserves the right to change the design or specifications at any time without notice.
Agiltron is a registered trademark of Photonwares Corporation in the U.S. and other countries.

# CrystaLatch™ 1x8 Series Fiber Optic Switch

## (SM, PM, Unidirectional, Bidirectional, High Power)

(Protected by U.S. patents 7224860，6757101，6577430 and pending patents)

DATASHEET

## Functional Diagram

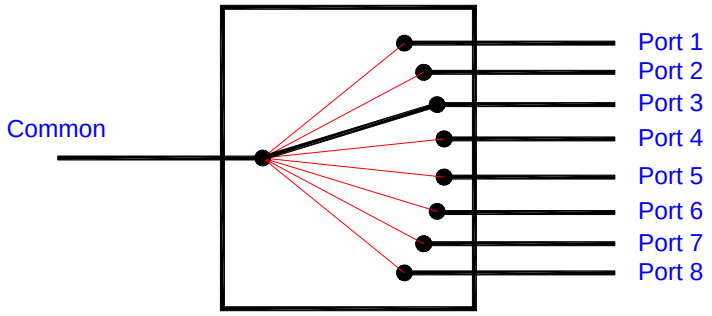


## Ordering Information

| | ☐☐ | ☐ | 2 | ☐ | ☐ | ☐ | ☐ | ☐ |
|---|---|---|---|---|---|---|---|---|
| **Prefix** | **Type** | **Wavelength** | **Switch** | **Package** | **Fiber Type** | **Fiber Cover** | **Fiber Length** | **Connector [5]** |
| **CLSW-** [1]<br>**CLPM-** [2]<br>**CLBD-** [3]<br>**CLPB-** [4] | 1x8 = 18<br>8x1 = 81<br>1x7 = 17<br>7x1 = 71<br>1x6 = 16<br>6x1 = 61<br>1x5 = 15<br>5x1 = 51 | 1310 = 3<br>1550 = 5<br>Special = 0 | Dual Stage = 2 | Standard = 2<br>-40~+85°C = A<br>-40~+70°C = B<br>-20~+85°C = C<br>-20~+70°C = D<br>Special = 0 | SMF-28 = 1<br>PM 1550 = B<br>Special = 0 | Bare fiber = 1<br>900 µm tube = 3<br>Special = 0 | 0.25m = 1<br>0.5m = 2<br>1.0m = 3<br>Special = 0 | None = 1<br>FC/PC = 2<br>FC/APC = 3<br>SC/PC = 4<br>SC/APC = 5<br>ST/PC = 6<br>LC/PC = 7<br>Duplex LC/PC = 8<br>LC/APC = A<br>LC/UPC = U<br>Special = 0 |

[1]. **CLSW: C**rysta**L**atch Dual Stage 1x8 **SW**ITCH.
[2]. **CLPM: C**rysta**L**atch Dual Stage 1x8 **PM** Switch.
[3]. **CLBD: C**rysta**L**atch Dual Stage 1x8 **BID**IRECTIONAL Switch.
[4]. **CLPB: C**rysta**L**atch Dual Stage 1x8 **P**M **B**idirectional Switch.
[5]. There isn't any connector in high power switches. Please contact us for high power connectors.

**Fiber Core Alignment**
Note that the minimum attenuation for these devices depends on excellent core-to-core alignment when the connectors are mated. This is crucial for shorter wavelengths with smaller fiber core diameters that can increase the loss of many decibels above the specification if they are not perfectly aligned. Different vendors' connectors may not mate well with each other, especially for angled APC.

**Fiber Cleanliness**
Fibers with smaller core diameters (<5 µm) must be kept extremely clean, contamination at fiber-fiber interfaces, combined with the high optical power density, can lead to significant optical damage. This type of damage usually requires re-polishing or replacement of the connector.

**Maximum Optical Input Power**
Due to their small fiber core diameters for short wavelength and high photon energies, the damage thresholds for device is substantially reduced than the common 1550nm fiber. To avoid damage to the exposed fiber end faces and internal components, the optical input power should never exceed 20 mW for wavelengths shorter 650nm. We produce a special version to increase the how handling by expanding the core side at the fiber ends.



Information contained herein is deemed to be reliable and accurate as of the issue date. Photonwares reserves the right to change the design or specifications at any time without notice.
Agiltron is a registered trademark of Photonwares Corporation in the U.S. and other countries.

## Driver Design Example for 1x4

A recommended +5VDC powered driving circuit is provided. The resistor network R1~R8 is to suppress the driving signal's voltage level to meet the "switch voltage" requirements. In specific applications, users can use lower voltage to eliminate the R1~R8. The Q1~Q8 is the control signal from either a function generator or a microcontroller general purpose I/O. The Q1-Q8 switching speed must meet the specific MOSFET switching requirement and CL 1x4 Switch specific requirement. Usually, the control signal speed is ≤ 2kHz.

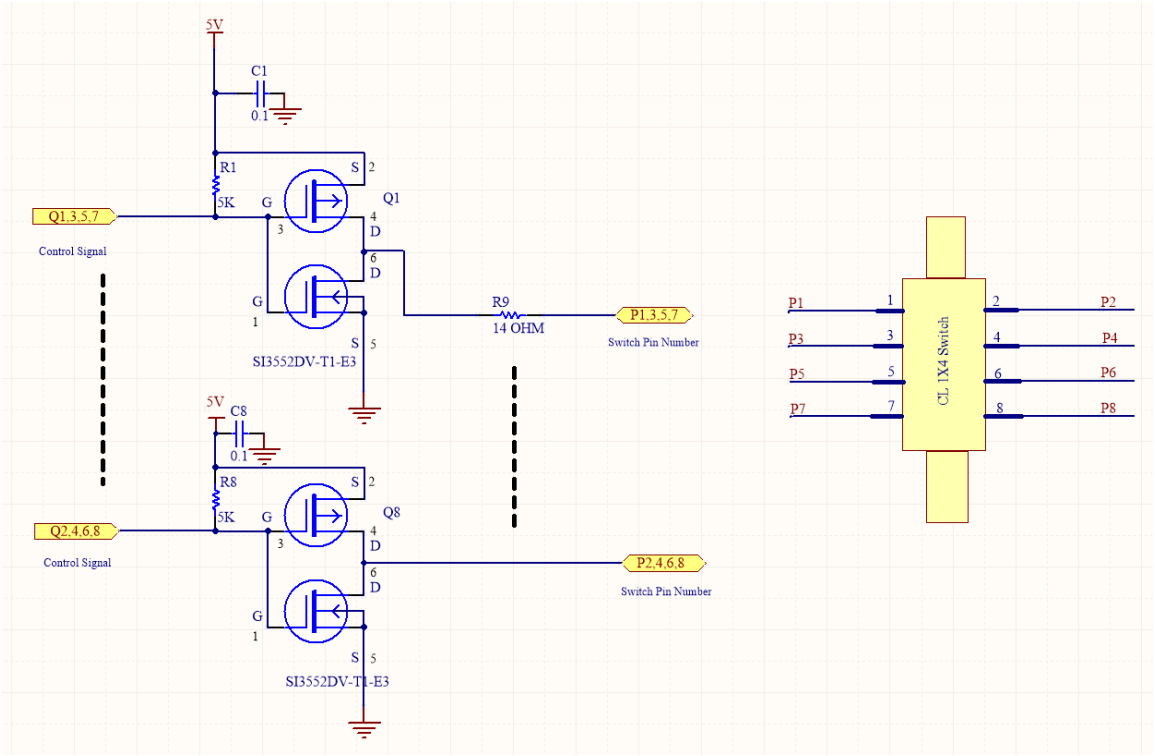


Usually, a clean power supply source will be sufficient. However, decoupling capacitors for the transistor supply rail are recommended depending on different applications. Minimum the current loop on the switching circuits will minimize the switching noise. For other layout recommendations, please refer to books or application notes from the IC manufacturer.




Information contained herein is deemed to be reliable and accurate as of the issue date. Photonwares reserves the right to change the design or specifications at any time without notice.
Agiltron is a registered trademark of Photonwares Corporation in the U.S. and other countries.